PRESSURE SENSOR(PSA/PSB SERIES)

▣Ordering information

PS A – V 01 C P – Rc1/8

Pressure port	Rc1/8	Standard(PSA Type)
	NPT1/8	Option(PSA Type)
	M5	Standard(PSB Type)
Output type		NPN open collector output
	P	PNP open collector output
Cable		Standard(Cable intergral type)
	(★) C	Connector type
Pressure range	01	100kPa
	1	1MPa
Pressure type		Standard pressure type
	V	Vacuum pressure type
	C	Compound pressure type
Appearance	A	Regular square(30mm×30mm)
	B	Rectangular(10.2mm×54mm)
	PS	Pressure Sensor

※(★) is only applied to PSB Series.

▣Specifications

Pressure type		Gauge pressure			
		Vacuum pressure type	Standard pressure type		Compound pressure type
Model	NPN output	PSA-V01 PSB-V01 PSB-V01C	PSA-01 PSB-01 PSB-01C	PSA-1 PSB-1 PSB-1C	PSA-C01 PSB-C01 PSB-C01C
	PNP output	PSA-V01P PSB-V01P PSB-V01CP	PSA-01P PSB-01P PSB-01CP	PSA-1P PSB-1P PSB-1CP	PSA-C01P PSB-C01P PSB-C01CP
Appearances		CE PSA [W30×H30×L38.5mm]		PSB (Cable integral type) (Connector type) [W54×H10.2×L25mm]	
Rated pressure range		0.0~-101.3kPa	0~100.0kPa	0~1,000kPa	-100.0~100kPa
Display and set pressure range		5.0~-101.3kPa	-5.0~110.0kPa	-50~1,100kPa	-101.3~110kPa
Max. pressure range		2 times of rated pressure		1.5 times of rated pressure	2 times of rated pressure
Applicable fluid		Air, Non-corrosive gas			
Power supply		12V-24VDC ±10%(Ripple P-P:Max. 10%)			
Current consumption		Max. 50mA			
Control output		• NPN open collector output ☞ Inflow current : Max. 100mA, Load voltage : Max. 30VDC, Residual voltage : Max. 1V • PNP open collector output ☞ Outflow current : Max. 100mA, Residual voltage : Max. 2V			
	Hysteresis(*1)	1 digit(2 digit/psi) fixed			2 digits fixed
	Repeat error	±0.2% F.S. ±1digit			±0.2% F.S. ±2digits
	Response time	Selectable 2.5ms, 5ms, 100ms, 500ms			
	Short circuit protection	Including			
Analog output		Max. ±2% F.S. (Max. ±1 at 25℃)			
Display method		3½ digit LED 7Segment			
Min. display interval		1 digit(2 digits/psi unit : 2 digit fixed)			2 digits
Pressure unit		kPa, kgf/cm², bar, psi, mmHg, mmH₂O, inHg	kPa, kgf/cm², bar, psi		kPa, kgf/cm², bar, psi, mmHg, mmH₂O, inHg
Characteristic of control output and displayed temp.		(*2) Max. ±1% F.S. (at 25℃)			Max. ±2% F.S.
Analog output temperature characteristic		(*2) Max. ±2% F.S. of display pressure at 25℃ within 0℃ to 50℃			

※F.S.(Full Scale) : Specified pressure range.
※(*1) The Hysteresis is changeable in output operation of F-1 mode.
※(*2) It is based on the pressure of 25℃ within 0~25℃.

▣Pressure and Max. pressure display range

Type	kPa	kgf/㎠	bar	psi	mmHg	inHg	mmH₂O
Vacuum pressure	**0 ~ -101.3** (5.0 ~ -101.3)	**0 ~ -1.034** (0.051 ~ -1.034)	**0 ~ -1.034** (0.05 ~ -1.034)	**0 ~ -14.70** (0.72 ~ -14.70)	**0 ~ -760** (38 ~ -760)	**0 ~ -29.9** (1.5 ~ 29.9)	**0 ~ -103.4** (5.1 ~ 103.4)
Standard pressure	**0 ~ 100.0** (-5.0 ~ 110.0)	**0 ~ 1.020** (-0.051 ~ 1.122)	**0 ~ 1.020** (-0.050 ~ 1.100)	**0 ~ 14.50** (-0.72 ~ 15.90)	———	———	———
	0 ~ 1000 (-50 ~ 1013)	**0 ~ 10.20** (-0.51 ~ 11.22)	**0 ~ 10.20** (-0.50 ~ 11.00)	**0 ~ 145.0** (-7.2 ~ 159.0)	———	———	———
Compound pressure type	**-100.0 ~ 100.0**	**-1.020 ~ 1.020**	**-1.020 ~ 1.020**	**-14.50 ~ 14.50**	**-750 ~ 750**	**-29.5 ~ 29.5**	**-102.0 ~ 102.0**

※( ) is max. pressure display range. ※When using a unit mmH₂O, please multiply display value by 100.

PRESSURE SENSOR(PSA/PSB SERIES)

▣Dimensions

Unit:mm

◎PSA

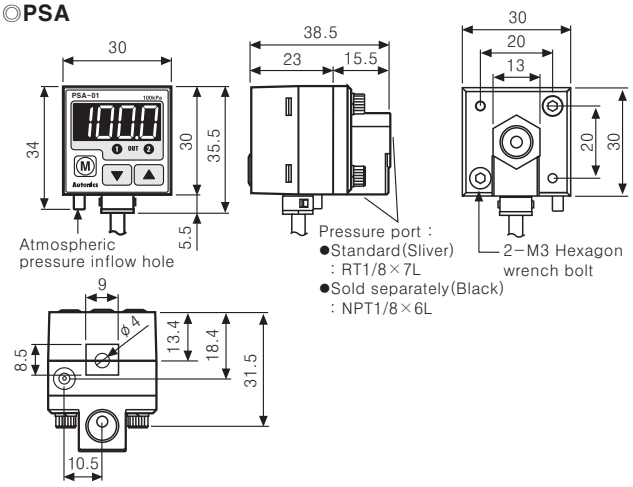

●Bracket for mounting(PSA type)

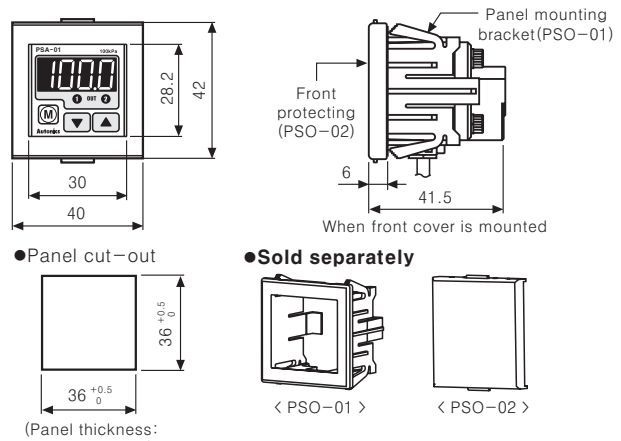

●Fixing bracket for mounting(PSA type)

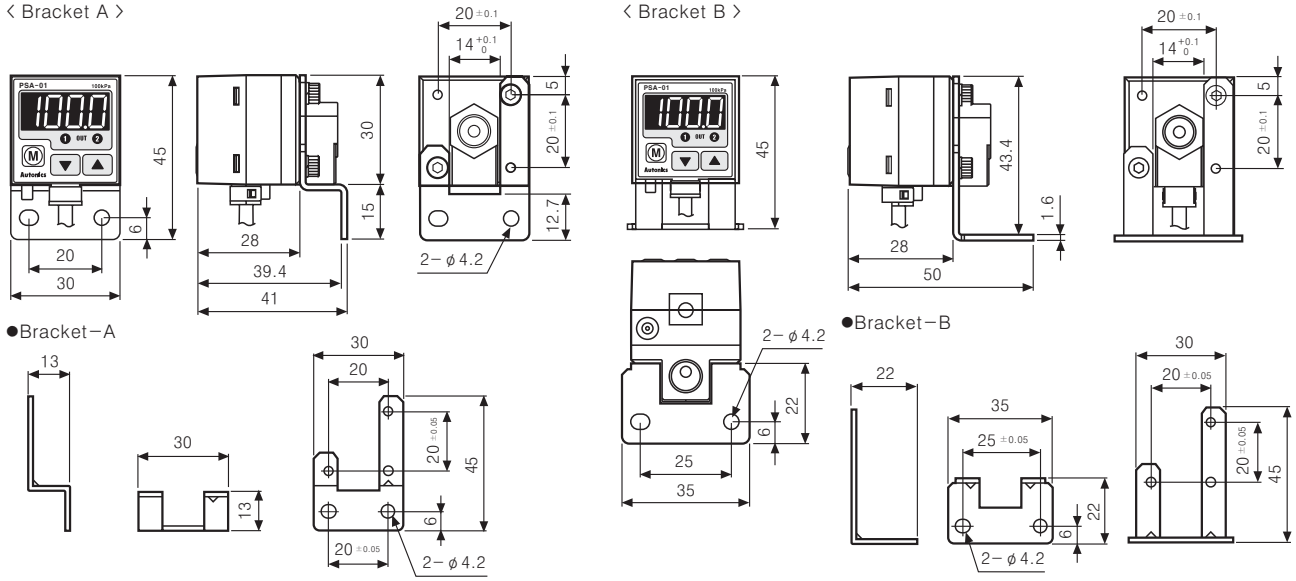

◎PSB

●Cable integral type

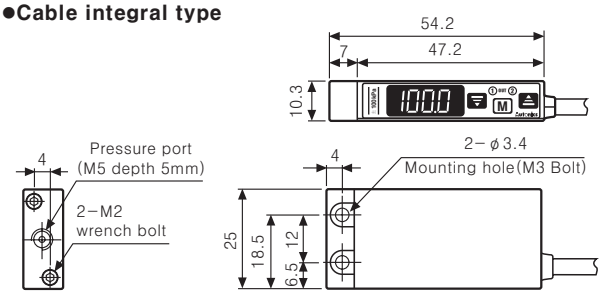

●Connector type

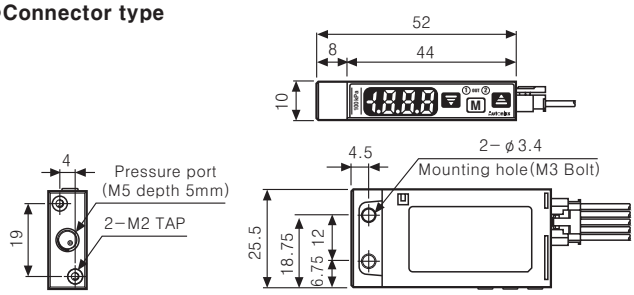

▣Control output diagram(PSA/PSB)

●NPN open collector output

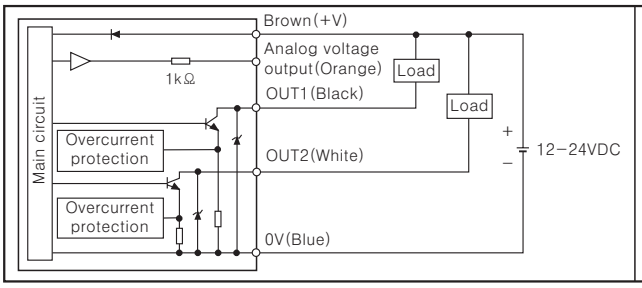

●PNP open collector output

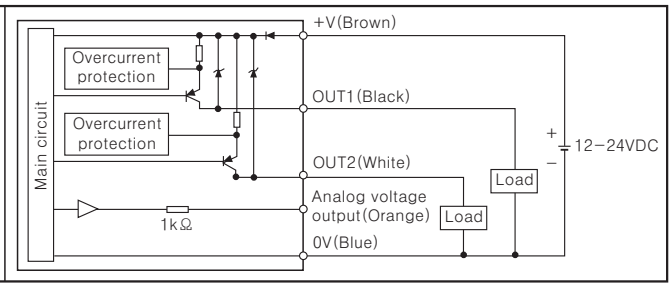

※There is no short−circuit protection in analog voltage output. Do not connect this output to power source or capacitive load directly.
※Please observe input impedance of connected equipment when use analog voltage output.
And be sure to check voltage drop caused by resistance of extended wire.